COMPARISON OF COMMON FASTENER GRADES

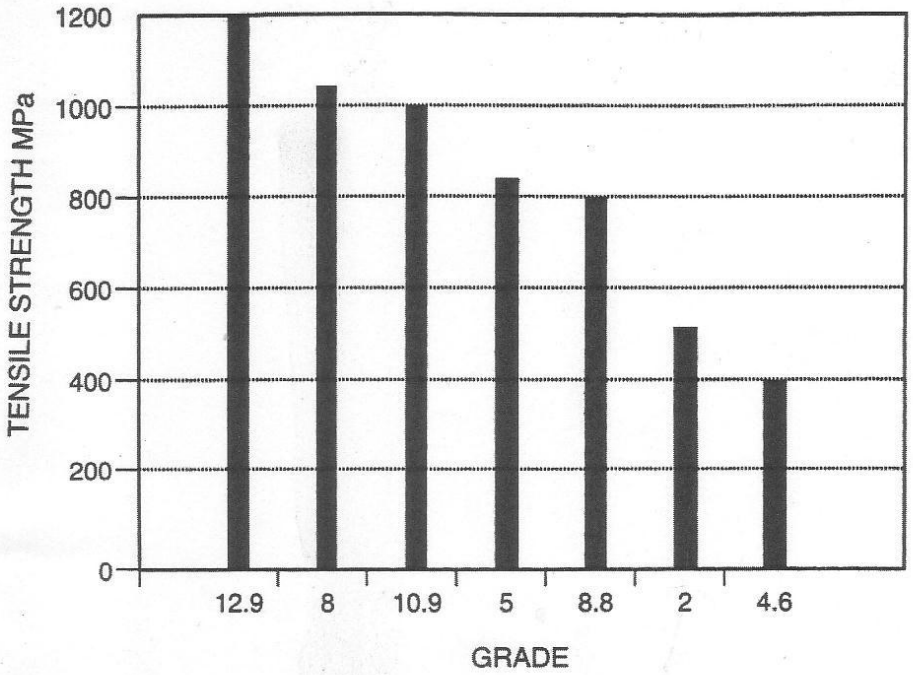

* NOTE: Grade 5 refers to diameter size 1/4 - 1"
Grade 2 refers to diameter size 1/4 - 3/4"

BOLT HEAD MARKINGS - WHAT DO THEY MEAN?

MARKING	DESIGNATION	STRENGTH
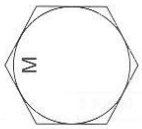	LOW TENSILE ISO METRIC	4.6, 4.8 Prop Class 5.6, 5.8 Prop Class 400 MPa, 500 MPa
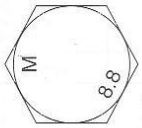	HIGH TENSILE ISO METRIC	8.8 Property Class 800 MPa
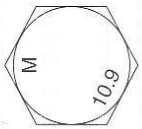	HIGH TENSILE ISO METRIC	10.9 Property Class 1000 MPa
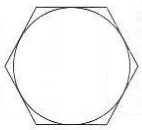	LOW TENSILE IMPERIAL	Grade 1, 58,000 psi Grade 2, 72,000 psi
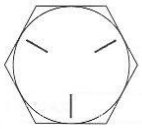	HIGH TENSILE IMPERIAL	Grade 5 120,000 psi
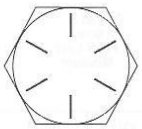	HIGH TENSILE IMPERIAL	Grade 8 150,000 psi
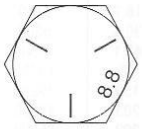	HIGH TENSILE STRUCTURAL	8.8 Property Class 830 MPa

METRIC BOLTS: As bolts tensile strength is measured in megapascals the first digit represents MPa in multiples of 100.

e.g. 8 = 800 MPa
4 = 400 MPa

The second digit represents the amount of elasticity (stretch) before breaking — this is measured as a percentage difference to be deducted.

e.g. .8 = 20% stretch
.6 = 40% stretch

IMPERIAL BOLTS: The tensile strength is measured in tons per sq inch or 1000's of pounds per sq inch.

e.g. 28 TSI
or 62220 PSI

Grades 2, 5, 8 etc are used to indicate different tensile strengths but have no relevance to each other or actual measurements.

BOLTS AND NUTS
IMPERIAL

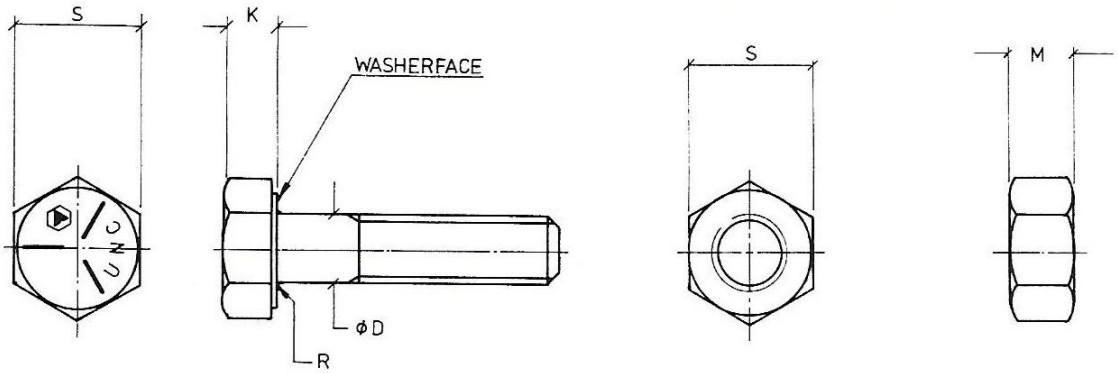

LENGTH OF THREAD

Nominal length of bolt	Length of Thread
Up to and including 6''	2 D + ¼''
Over 6''	2 D + ½''

Note
Bolts that are too short for minimum thread lengths are threaded close to the head and are designated as set screws.

UNIFIED SERIES (includes washer face)

Nominal Diameter	Threads Per Inch		D Shank Diameter in.		S Across flats in.		R Radius under head in.	K Height of head in.		M Thickness of nut in.	
	UNC	UNF	Max.	Min.	Max.	Min.	Min.	Max.	Min.	Max.	Min.
1/4	20	28	0.250	0.245	0.438	0.428	0.015	0.163	0.150	0.226	0.212
5/16	18	24	0.313	0.306	0.500	0.489	0.015	0.211	0.195	0.273	0.258
3/8	16	24	0.375	0.369	0.562	0.551	0.015	0.243	0.226	0.337	0.320
7/16	14	20	0.438	0.430	0.625	0.612	0.015	0.291	0.272	0.385	0.365
1/2	13	20	0.500	0.493	0.750	0.736	0.015	0.323	0.302	0.448	0.427
9/16	12	18	0.563	0.554	0.812	0.798	0.020	0.371	0.348	0.496	0.473
5/8	11	18	0.625	0.617	0.938	0.922	0.020	0.403	0.378	0.559	0.535
3/4	10	16	0.750	0.741	1.125	1.100	0.020	0.483	0.455	0.665	0.617
7/8	9	14	0.875	0.866	1.312	1.285	0.040	0.563	0.531	0.776	0.724
1	8	12	1.000	0.990	1.500	1.469	0.060	0.627	0.591	0.887	0.831

BSW (no washer face)

Nominal Diameter	Threads Per Inch	D Shank Diameter in.	S Across flats in.		R Radius under head in.	K Height of head in.		M Thickness of nut in.	
		Max.	Max.	Min.	Max.	Max.	Min.	Max.	Min.
1/4	20	0.280	0.445	0.435	0.031	0.186	0.166	0.200	0.180
5/16	18	0.342	0.525	0.515	0.031	0.228	0.208	0.250	0.230
3/8	16	0.405	0.600	0.585	0.031	0.270	0.250	0.312	0.292
7/16	14	0.468	0.710	0.695	0.031	0.312	0.292	0.375	0.355
1/2	12	0.530	0.820	0.800	0.031	0.363	0.333	0.437	0.417
5/8	11	0.665	1.010	0.985	0.047	0.447	0.417	0.562	0.542
3/4	10	0.790	1.200	1.175	0.047	0.530	0.500	0.687	0.668
7/8	9	0.915	1.300	1.270	0.062	0.623	0.583	0.750	0.720
1	8	1.040	1.480	1.450	0.062	0.706	0.666	0.875	0.835

STAINLESS STEEL BOLTS, NUTS AND WASHERS

DIMENSIONS

HEXAGON HEAD BOLTS

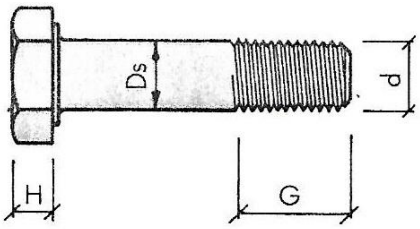

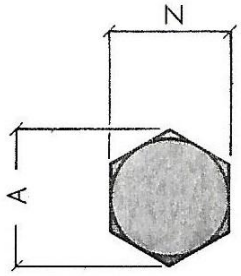

Metric threads, thread tolerance class 6g
Swedish Standard SS 2165 (DIN 931/933)

Thread	Ds		N		A	H			G L ≤ 125mm	
d	nom. = max.	min.	nom. = max.	min	max.	max.	nom.	min.	nom. = min.	max.
M 6	6	5.82	10	9.78	10.95	4.15	4.0	3.85	18	20.5
M 8	8	7.78	13	12.73	14.26	5.65	5.5	5.35	22	25.1
M10	10	9.78	17	16.73	18.74	7.18	7.0	6.82	26	29.8
M12	12	11.73	19	18.67	20.91	8.18	8.0	7.82	30	34.4
M16	16	15.73	24	23.67	26.51	10.18	10.0	9.82	38	43
M20	20	19.67	30	29.67	33.23	13.35	13.0	12.65	46	52.2
M24	24	23.67	36	35.38	39.63	15.35	15.0	14.65	54	61.5

UNC threads, thread tolerance class 2A
Swedish Standard SS 1943 (ANSI B18.2)

Thread	Ds		N		A	H			G L ≤ 152mm (6'')	
d	nom. = max.	min.	nom. = max.	min.	min.	max.	nom.	min.	nom. = min.	max.
1/4 UNC	6.35	6.22	11.11	10.87	12.4	4.14	4.0	3.81	19	24
5/16 UNC	7.94	7.79	12.70	12.42	14.1	5.36	5.2	4.95	22	27
3/8 UNC	9.53	9.37	14.29	14.00	16.0	6.17	6.0	5.74	25	30
1/2 UNC	12.70	12.52	19.05	18.69	21.3	8.20	7.9	7.67	32	37
5/8 UNC	15.88	15.67	23.81	23.42	26.7	10.24	9.9	9.60	38	44
3/4 UNC	19.05	18.72	28.58	27.94	31.9	12.27	11.9	11.56	44	51
7/8 UNC	22.23	21.90	33.34	32.64	37.2	14.30	13.9	13.49	51	58
1 UNC	25.40	25.07	38.10	37.31	42.5	15.93	15.5	15.01	57	65

ISO Metric bolts and nuts

DIMENSIONS

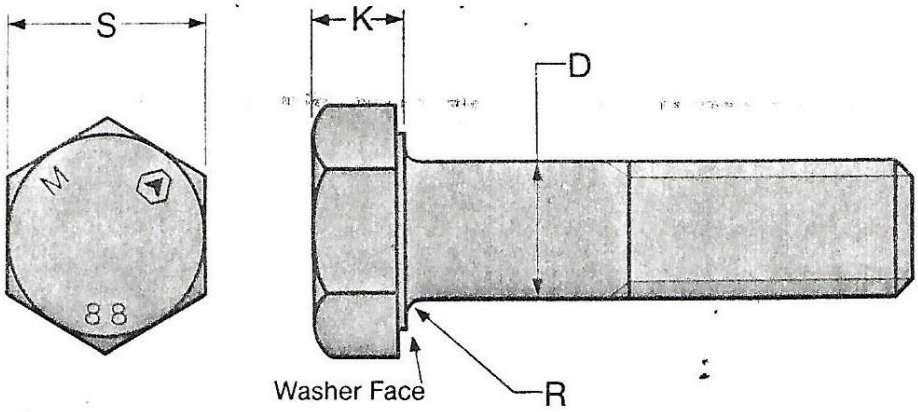

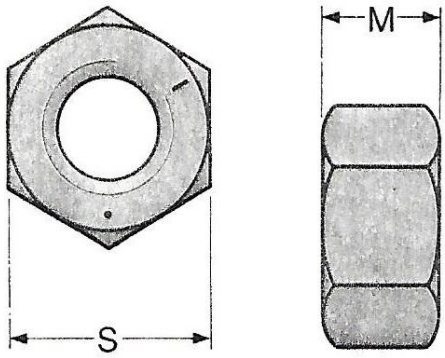

LENGTH OF THREAD

Nominal length of bolts	Length of thread
Up to and including 125 mm	2D + 6mm
Over 125 mm up to and including 200 mm	2D + 12 mm
Over 200 mm	2D + 25 mm

Note:

Bolts that are too short for minimum thread lengths are threaded close to the head and are designated as set screws.

CLASS 8.8 (includes washer face)

Nom Size	Pitch of thread mm	D Diameter of unthreaded shank mm max	D min	S Width across flats mm max	S min	R Radius under head mm min	k Height of head mm max	M Thick-ness of nut mm max
M6	1.00	6.00	5.82	10.00	9.78	0.25	4.15	5.2
M8	1.25	8.00	7.78	13.00	12.73	0.4	5.45	6.8
M10	1.50	10.00	9.78	16.00	15.73	0.4	6.58	8.4
M12	1.75	12.00	11.73	18.00	17.73	0.6	7.68	10.8
M16	2.00	16.00	15.73	24.00	23.67	0.6	10.18	14.8
M20	2.50	20.00 *	19.67	30.00	29.16	0.8	12.72	18.0
M24	3.00	24.00 *	23.67	36.00	35.00	0.8	15.22	21.5

CLASS 4.6 (does not always include washer face)

M6	1.00	6.48	5.52	10.00	9.64	0.3	4.38	6.2
M8	1.25	8.58	7.42	13.00	12.57	0.4	5.68	6.8
M10	1.50	10.58	9.42	16.00	15.57	0.4	6.85	8.4
M12	1.75	12.70	11.30	18.00	17.57	0.6	7.95	10.8
M16	2.00	16.70	15.30	24.00	23.16	0.6	10.75	14.8
M20	2.50	20.84 *	19.16	30.00	29.16	0.8	13.40	18.0
M24	3.00	24.84 *	23.16	36.00	35.00	0.8	15.90	21.5
M30	3.50	30.84 *	29.16	46.00	45.00	1.0	19.75	25.6
M36	4.00	37.00 *	35.00	55.00	53.80	1.0	23.55	31.0

* Hot forged products may have shank diameter within the range allowed in AS 1252 — 1983.

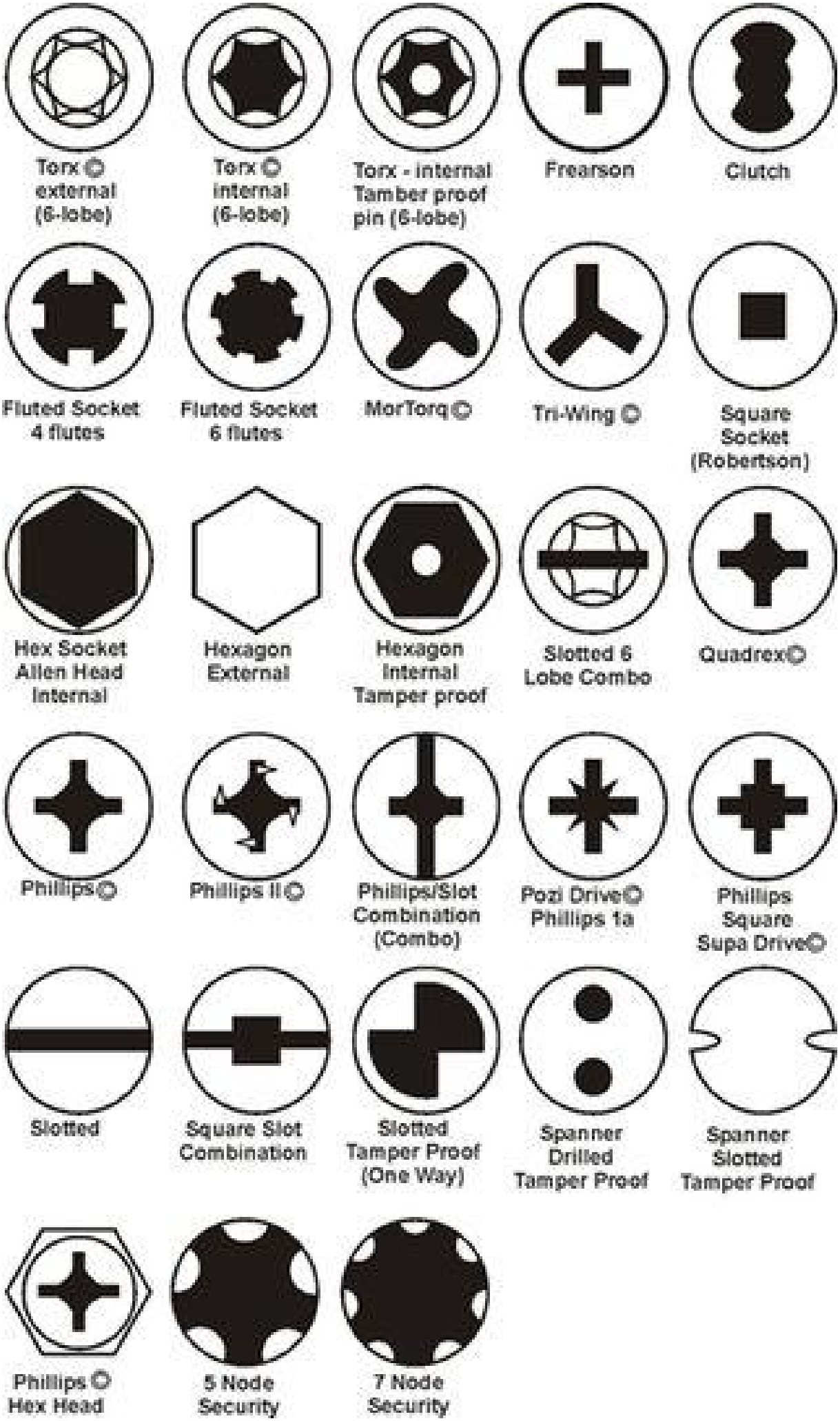
Torx ©
external
(6-lobe)
Torx ©
internal
(6-lobe)
Torx - internal
Tamber proof
pin (6-lobe)
Frearson
Clutch
Fluted Socket
4 flutes
Fluted Socket
6 flutes
MorTorq ©
Tri-Wing ©
Square
Socket
(Robertson)
Hex Socket
Allen Head
Internal
Hexagon
External
Hexagon
Internal
Tamper proof
Slotted 6
Lobe Combo
Quadrex©
Phillips©
Phillips II©
Phillips/Slot
Combination
(Combo)
Pozi Drive©
Phillips 1a
Phillips
Square
Supa Drive©
Slotted
Square Slot
Combination
Slotted
Tamper Proof
(One Way)
Spanner
Drilled
Tamper Proof
Spanner
Slotted
Tamper Proof
Phillips ©
Hex Head
5 Node
Security
7 Node
Security